BanksiaControls

QUALITY
INDUSTRIAL
FLOWMETERS

BanksiaControls is an Australian owned company specializing in supplying a range of positive displacement rotary piston, oval gear, insertion and impeller flow meters, ancillary flow hardware and dedicated electronic flow instrumentation. The meters measure the flow of clean liquids and are produced in a wide variety of materials and configurations to suit most markets including the food, chemical, cosmetic, ink, pharmaceutical, paint, petroleum and additive industries.

BanksiaControls business has been built initially around its Multipulse series positive displacement meters which were introduced in 1987, thus setting a new standard for quality and reliability at competitive pricing. The oval gear flowmeter range was added in order to extend the flow rate capacities of the product, offering for both low flow & high flow rate applications.

Most BanksiaControls products have ATEX and IECEx approvals for explosion proof areas.

BanksiaControls also supply a complete range of complimentary flow instruments including remote or integral mounted flow rate totalizers and batch controllers, these instruments have both ATEX & IECEx hazardous area approvals.

The manufacturing facility is located close to Sydney's international airport. All design, assembly and calibration of the flow products is in house along with sales, administration and marketing supporting both domestic and international markets.

The success of BanksiaControls is attributed to the experience and knowledge acquired over a period of 30 years by its key personnel in the flow measurement industry. BanksiaControls is committed to developing and expanding its range of proprietary flow products to meet the ever changing needs of industry.

OM SMALL OVAL GEAR FLOWMETERS

OM positive displacement meters measure small flow rates as low as ½ L/hr of clean liquids both high & low viscosities.

Page 4-5

OM MEDIUM OVAL GEAR FLOWMETERS

These are BanksiaControls medium capacity flowmeters for pipe sizes from ½”~2” covering flows from 1~450 L/min.

Page 6-7

OM LARGE OVAL GEAR FLOWMETERS

BanksiaControls’s 3” & 4” large capacity positive displacement flowmeters covering flows from 50 to 2500 litres/min.

Page 8-9

TFM TURBINE FLOWMETERS

Turbine flowmeters are highly accurate meters for measuring low viscosity liquids, sizes from ¼” to 16” cover flows from 3 litres/hr to 4000m3/hr.

Page 10-11

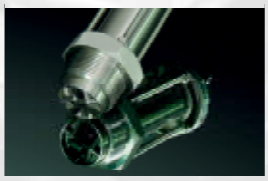

DUALPULSE INSERTION PADDLE WHEEL

A cost effective means of measuring the flow of water & fuels in pipes from 1½” to 100”. Integral options provide great versatility for industries including HVAC & irrigation.

Page 12-13

MULTIPULSE PISTON FLOWMETERS

The Oscillating Piston principal is widely established as the most simple & reliable of the positive displacement metering principals supporting industry to this day.

Page 14-15

IMPELLER FLOWMETERS

Tangential Impeller meters are low cost meters in the range of 1~70L/min for fuels, solvents, coolants & water.

Page 16

HIGH PRESSURE & SPECIFIC BUILD FLOW METERS

These meters address the frequent technical issues typical of the off shore oil & gas, mining, exploration, hydraulic petroleum & marine industries.

Page 17

SPECIALTY FLOWMETERS

Solutions for industry specific applications. Additive injection, fuel oil burner blocks, fuel consumption & super acid proof meters.

Page 18

FLOW INSTRUMENTATION

Providing scaling, totalizing, batching, rate indication & programmable outputs, range includes mechanical totalisers.

Page 19

WAFER/THREADED MANIFOLD & FLANGE ADAPTORS

A range of wafer style flange manifolds and threaded manifolds for its smaller sized positive displacement flowmeters, as well as, flange adaptors for its medium and large sized positive displacement meters.

Page 20

OM GEAR - Small capacity meters

The OM Oval series PD flowmeters offer a high level of accuracy turndown & repeatability. These precision meters are used for flow rate measurement in flow monitoring & control application and for totalizing in dispensing and batching.

The OM gear meters are suitable for use with a wide range of clean liquids including viscous lubricants, chemicals, food bases & non-conductive low viscosity solvents either pumped or gravity fed.

FEATURES :

- High accuracy & repeatability.
- Measure low & high viscosity liquids.
- Optional electronic registers.
- Certified Exd hazardous area versions in all sizes.
- No need for flow conditioning *(straight pipe run etc.)*
- Quadrature pulse output option & bi-directional flow.
- Specialty high pressure meters for mining & exploration.

STANDARD OPTIONS :

High resolution output, Explosionproof, integral and remote LCD totaliser-batch totaliser, flow rate totalisers, scaled pulse, 4~20mA & flow alarm outputs, electronic batch controllers and pulse processing modules.

DIMENSIONS

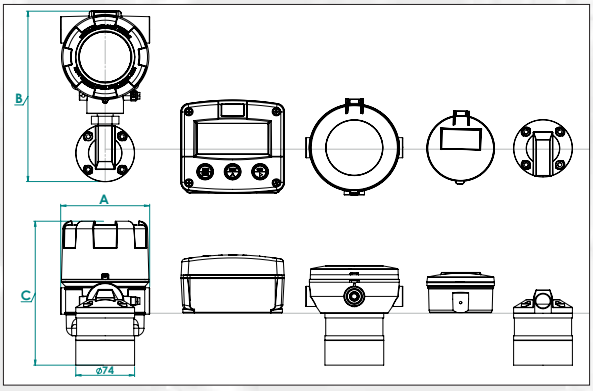

	DIM C	DIM C	DIM C	DIM B	DIM A
OPTIONS	OM004	OM006	OM008	OPTION	OM004, 6, 8
E-Series	186	186	190	220	112
F-Series	142	142	148	120	130
RT-Series	122	122	129	124	122
BT11	113	113	120	94	85
Cap	94	94	99	72	74

GENERAL SPECIFICATIONS

Model prefix :	**OM004**	**OM006**	**OM008**
Nominal size (inches)	4mm *(1/8")*	6mm *(1/4")*	8mm *(3/8")*
** Flow range - litres / hr*	0.5 ~ 36	2 ~ 100	15 ~ 550
(US gal./hr)	*(0.13 ~ 9.5)*	*(0.5 ~ 27)*	*(4 ~ 145)*
Accuracy @ 3cp	±1% o.r. *(± 0.2% with optional NL correction)*		
Repeatability	typically ± 0.03%		
Temperature range	-40ºC ~ +120ºC *(-4ºF ~ +250ºF)*		
Maximum pressure	bar *(PSI)*		
aluminium	15 *(220)*		
316L stainless	34 *(500)*		
high pressure stainless	Refer Page 9		
Protection class	IP66/67 (NEMA4X), optional Exd IIB T6 or I.S.		
Recommended filtering	75 micron *(200 mesh)* minimum		
***Electrical** - for pulse meters (see also optional outputs)*			
Output pulse resolution pulses / litre *(pulses / US gallon)* - nominal			
Reed switch	2800 *(10600)*	1050 *(4000)*	355 *(1345)*
Hall effect	2800 *(10600)*	1050 *(4000)*	710 *(2690)*
High Resolution Hall effect	11220 *(42470)*	4200 *(15900)*	N/A
*** Reed switch output*	30Vdc x 200mA max.		
Hall effect output (NPN)	3 wire open collector, 5~24Vdc, 20mA max.		

** Max. flow is to be reduced as viscosity increases, max. pressure drop 100Kpa. (15 psi)*

PRESSURE DROP & ERROR CURVES

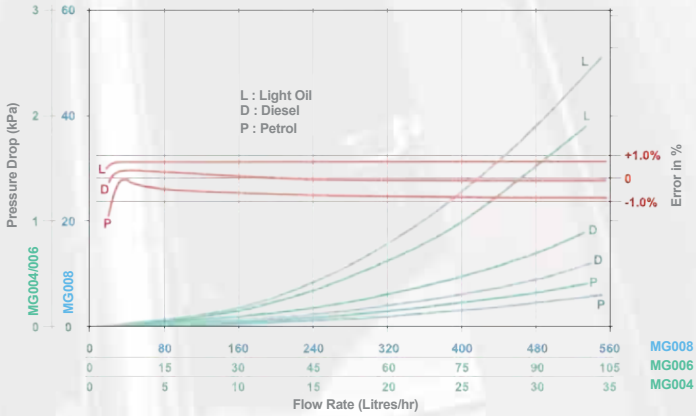

MODEL CODING

OM004	4mm (1/8")	0.5-36 L/hr	0.13 - 9.5 GPH
OM006	6mm (1/4")	2-100 L/hr	0.5 - 27 GPH
OM008	8mm (3/8")	15-550 L/hr	4 - 145 GPH

Body Material

A	Aluminium
S	316/L Stainless Steel
N	Intermediate press. 316 SS meter (OM004N ~ OM008N = 100bar max.)
H	High pressure 316 SS (OM004H ~ OM008H = 400bar [5800psi] max.)

Rotor Material

0	PPS* - Teflon Filled (Polyphenylene Sulfide)* Only available with OM008 size
5	Stainless Steel (all standard OM004 ~ OM008 meters)
7	Keishi cutting of stainless steel rotors (for high viscosity liquids) (Only available with 008 size)

Bearing type

0	No bearing-PPS rotors only
1	Carbon-Ceramic (Stainless steel rotors only)

O-ring material

1	Viton (standard); -15°C (5°F) minimum
2	Ethylene Propylene Rubber (EPR); -40~+120°C (-40~+250°F)
3	Teflon encapsulated silicone - application specific; -40°C minimum
4	Buna-N (Nitrile) -40~+100°C (-4-~+212°F)

Temperature Limits

2	120°C (250°F) - see note 1
3	*150°C (300°F) max. - (Hall effect output only); O-Ring code 1 or 3
5	*120°C (250°F) max. (Includes integral cooling fin) see note 2
8	*80°C (180°F) max. (For OM008 with PPS rotors)

Process connections

1	BSP Female threaded
2	NPT Female threaded
4	Flange Selection (direct on body of meter - meter body size only) (Ref. to flange/thread selection table)
7	Threaded manifold (Ref. to flange/thread selection table)
8	Wafer Manifold Selection (Ref. to flange/thread selection table)
9	Customer nominated

Cable entries

0	3~6mm cable gland
1	M20 x 1.5mm
2	1/2" NPT

Flange/ Thread selection

T	Threaded manifold
A	ANSI
D	DIN
J	JIS
S	Special

T Thread type

B	BSPP (G) female threaded manifold
N	NPT female threaded manifold
A	MP Autoclave threaded manifold - female thread
S	Special consult factory

A ANSI

1	ANSI-150
2	ANSI-300
3	ANSI-600
4	ANSI-900
5	ANSI-1500
6	ANSI-2500
S	Special

D DIN

1	DIN, PN15
2	DIN, PN-40
S	Special

J JIS

1	JIS, 10K
2	JIS, 20K
S	Special

S Special - Consult factory

Flange Face

T	Thread only
1	RF
3	RTJ - only applicable to ANSI600, 900, 1500 and 2500 flanges
9	Other

Flange/Thread Size

18	1/8"	20	2"
14	1/4"	25	2 1/2"
38	3/8"	30	3"
12	1/2"	40	4"
96*	9/16" MP Autoclave * thread only	50	5"
34	3/4"	60	6"
10	1"	99	Special
15	1 1/2"		

Model No. Example

OM006	S	5	1	1	-	5	1	2	F1

Integral options

		Nil
	SS	Stainless Steel Terminal Cover
	RS	Reed Switch only - to suit Intrinsically safe installations
IECEx & ATEX approved	E1	Explosion proof Exd (aluminium & stainless meters)
IECEx & ATEX mines approved	E2	Explosion proof Exd I/IIB T4/T6 (stainless meters only)
not available with high press models	QP	Quadrature pulse (2NPN phased outputs)
IECEx & ATEX approved	Q1	Explosion proof Exd (with quadrature pulse, na with HP meters
OM004:11200ppL, OM006:4200ppl	HR	High resolution Hall effect output (Hall Effect only)
IECEx & ATEX approved	H1	Explosion proof - Exd with HR Hi-res. Hall option
for injected combustion engines	PF	Pulsating flow option (Hall effect output only)
IECEx & ATEX approved	P1	Explosion proof - Exd with PF pulsating flow option
	E0	EB10 Batch Controller
Scaled pulse, alarm, 4 ~ 20mA	R5	RT14 Flow Rate Totaliser with all outputs (GRN Housing)
IECEx & ATEX approved	R3	Intrinsically safe RT12 (I.s) (GRN Housing)
Faeries indicators are integrally mounted to flowmeter via screw and gasket	F1	F112 in GRP Encl, Non IS, Battery, DC and LP 4to20mA, Linearisation, OC Pulse
	F2	F112 in GRP Encl, IS Appr, Battery, DC and LP 4to20mA, Linearisation, OC Pulse
	F10	F112 in Alu, Non IS, Battery, DC and LP 4to20mA, Linearisation, OC Pulse
	F11	F112 in Alu, IS Appr, Battery, DC and LP 4to20mA, Linearisation, OC Pulse
	F12	F112 in SS Encl, Non IS, Battery, DC and LP 4to20mA, Linearisation, OC Pulse
	F13	F112 in SS Encl, IS Appr, Battery, DC and LP 4to20mA, Linearisation, OC Pulse
	F18	F018 in Alu, Encl, IS Appr, Battery, DC and LP 4to20mA, Linearisation, OC Pulse, HART
	F19	F018 in SS Encl, IS Appr, Battery, DC and LP 4to20mA, Linearisation, OC Pulse, HART
Eseries indicators are integrally mounted to flowmeter via Exd approved line bushing	E10	E112 in Alu, Encl, Exd Appr, Battery, DC and LP 4to20mA, Linearisation, OC Pulse
	E11	E112 in SS Encl, Exd Appr, Battery, DC and LP 4to20mA, Linearisation, OC Pulse
	E18	F018 in Alu, Encl, Exd Appr, Battery, DC and LP 4to20mA, Linearisation, OC Pulse, HART
	E19	F018 in SS Encl, Exd Appr, Battery, DC and LP 4to20mA, Linearisation, OC Pulse, HART
with scaleable pulse output	B2	BT11 dual totaliser (with scaleable pulse output)
IECEX & ATEX approved	B3	I.S. intrinsically safe BT 11 including output
	SB	Specific build requirement

(1) 120ºC (250ºF) for pulse meters, 80ºC (180ºF) rating with BT, RT, F series & EB options. See temperature code 5 for higher temperature with BT,RT, & EB
(2) Cooling fin fitted to integral instruments for operation from 80~120ºC (180~250º)

OM GEAR - Medium capacity meters

The OM Oval series PD flowmeters offer a high level of accuracy turndown & repeatability. These precision meters are used for flow rate measurement in flow monitoring & control applications and for totalizing in dispensing and batching.

OM gear meters are suitable for use with a wide range of clean liquids including additives, fuels, viscous lubricants, chemicals, food bases & non-conductive low viscosity solvents either pumped or gravity fed.

FEATURES :

- High accuracy & repeatability.
- Measure low & high viscosity liquids.
- Optional mechanical & electronic registers.
- Certified Exd hazardous area versions in all sizes.
- No need for flow conditioning *(straight pipe run etc.)*
- Quadrature pulse output option & bi-directional flow.
- High pressure meters for mining & exploration.

STANDARD OPTIONS :

Flanged and hygienic process connections, Explosionproof, integral and remote LCD totaliser-batch totaliser, flow rate totalisers, scaled pulse, 4~20mA & flow alarm outputs, electronic batch controllers and a mechanical register.

GENERAL SPECIFICATIONS

Model prefix :	**OM015**	**OM025**	**OM040**	**OM050**
Nominal size (inches)	15mm (1/2")	25mm (1")	40mm (1.5")	50mm (2")
** Flow range (litres / min)*	1 ~ 40	10 ~ 150	15 ~ 250	30 ~ 450
** Flow range (USgal / min)*	0.26 ~ 10.6	2.6 ~ 40	4 ~ 66	8 ~ 120
Accuracy @ 3cp	± 0.5% of reading *(± 0.2% with optional NL correction)*			
Repeatability	typically ± 0.03%			
Temperature range	-40ºC ~ +120ºC *(-4ºF ~ +250ºF)*			
Maximum pressure (threaded meters)	Bar *(psig)*			
aluminium	68 bar *(1000)*	68 bar *(1000)*	30 bar *(440)*	20 bar *(300)*
316L stainless	68 bar *(1000)*	68 bar *(1000)*	30 bar *(440)*	38 bar *(560)*
high pressure stainless	400 bar	400 bar	400 bar	300 bar
Protection class	IP66/67 (NEMA4X), optional Exd IIB T6 or I.S.			
Recommended filtering	150 microns *(100 mesh)* minimum			
***Electrical** - for pulse meters (see also optional outputs)*				
Output pulse resolution :	pulses / litre *(pulses / US gallon)* - nominal			
Reed switch	83 *(314)*	27 *(102)*	14 *(53)*	6.5 *(25)*
Hall effect	166 *(628)*	107 *(405)*	56 *(212)*	26 *(99)*
Quadrature Hall option	166 *(628)*	53.5 *(203)*	28 *(106)*	13 *(50)*
Reed switch output	30Vdc x 200mA max.			
Hall effect output (NPN)	3 wire open collector, 5~24Vdc, 20mA max.			

** Max. flow is to be reduced as viscosity increases, max. pressure drop 100Kpa. (15 psi)*

PROCESS	DIM A	DIM A	DIM A	DIM A
Connections	OM015	OM025	OM040	OM050
ANSI 150 Flange	189	213	252	300
ANSI 300 Flange	189	213	252	300
DIN 16 Flange	189	213	252	300
BSP Screwed	104	152	234	236
NPT Screwed	104	152	234	236

OPTION	DIM C	DIM C	DIM C	DIM C	DIM C	DIM C	DIM C	DIM C
	OM015	OM025	OM040	OM050	OM015	OM025	OM040	OM050
E-Series	168	182	168	235	321	321	321	321
F-Series	165	179	205	227	120	120	162	180
RT-Series	149	168	200	212	124	124	162	180
BT11	136	155	188	200	110	120	162	180
Cap	113	208	165	177	110	120	162	180

ACCURACY CURVES & PRESSURE DROP

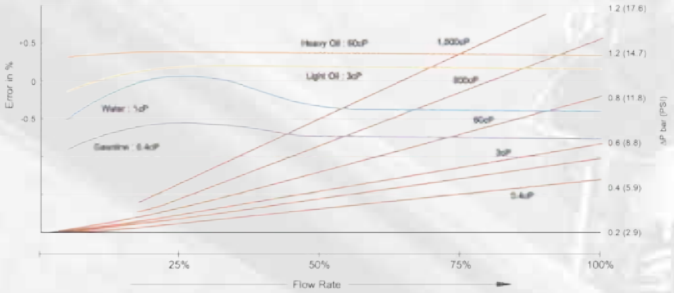

DIMENSIONS

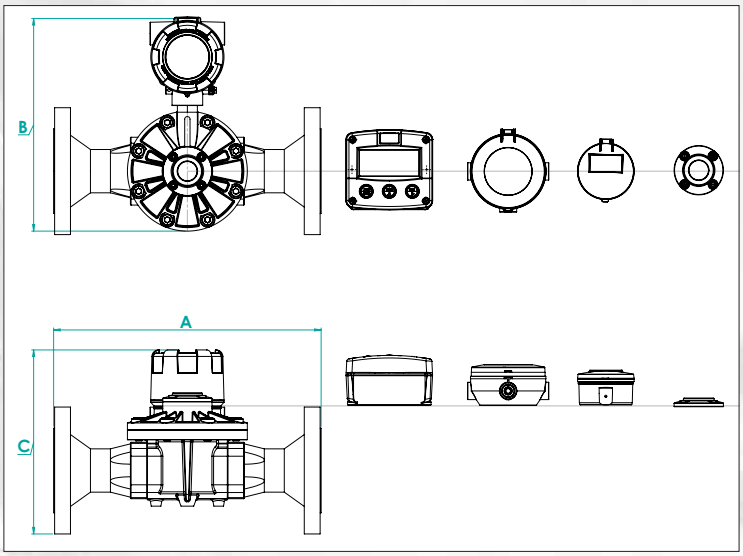

MODEL CODING

OM015	15mm (1/2")	1-40 L/min	0.26-10.6 GPM
OM025	25mm (1")	10-150 L/min	2.6-40 GPM
OM040	40mm (1 1/2")	15-250 L/min	4-66 GPM
OM050	50mm (2")	30-450 L/min	8-120 GPM

Body material

- **A** Aluminium
- **M** Intermediate pressure aluminium meter (Only OM025 = 138 Bar [2000psi] max.)
- **S** 316/L Stainless Steel
- **N** Intermediate press. 316/L SS meter (Om015N ~ 025N = 100bar [1450 PSI] OM040N-050N = 50bar [725PSI] max.)
- **H** High pressure 316/L SS (OM025H ~ 040H = 400bar [5800psi] max. OM050H = 300bar [4350PSI] max.)

Rotor material

- **0** PPS-Teflon Filled (Polyphenylene Sulfide)
- **1** Keishi cutting of PPS rotors (for high viscosity liquids)
- **5** Stainless Steel rotors (Not available for OM050 meter)
- **7** Keishi cutting of Stainless Steel rotors (for high viscosity liquids)

Bearing type

- **0** No bearing - (PPS rotors only)
- **1** Carbon-Ceramic (Stainless Steel rotors only)

O-ring material

- **1** Viton (standard); -15°C (+5°F) minimum
- **2** Ethylene Propylene Rubber (EPR); -40~+120°C (-40~+250°F)
- **3** Teflon encapsulated silicone - application specific; -40°C (-40°F) minimum
- **4** Buna-N (Nitrile), -40~+100°C (-40~+212°F)

Temperature limits

- **2** 120°C (250°F) - see note 1
- **3** *150°C (300°F) max. - (Hall effect output only), for O-Ring Code 1 or 3
- **5** *120°C (250°F) max. (Includes integral cooling fin) see note 2

Process connections*(3)

- **1** BSP female threaded
- **2** NPT female threaded
- **3** *Tri-clamp hygienic ferrules
- **4** ANSI-150 RF Flanges
- **5** ANSI-300 RF Flanges
- **6** PN16 DIN flanges
- **7** JIS10kg/cm2 flanges
- **9** Customer nominated

Cable entries

- **0** 3~6mm cable gland (high pressure meter only)
- **1** M20 x 1.5mm
- **2** 1/2" NPT

(1) 120°C (250°F) for pulse meters, 80°C (180°F) rating with BT, RT, F series & EB options. See temperature code 5 for higher temperature with BT, RT, & EB
(2) Cooling fin fitted to integral instruments for operation from 80~120°C (180~250°)

Model No. Example

OM025	S	2	2	1	-	2	1	2	F1

Integral options

		Nil
	SS	Stainless Steel Terminal Cover
	RS	Reed Switch only - to suit Intrinsically safe installations
IECEx & ATEX approved	E1	Explosion proof Exd (aluminium & stainless meters)
IECEx & ATEX mines approved	E2	Explosion proof Exd I/IIB T4/T6 (stainless meters only)
not available with high press models	QP	Quadrature pulse (2NPN phased outputs)
IECEx & ATEX approved	Q1	Explosion proof Exd (with quadrature pulse, na with HP meters
OM004:11200ppL, OM006:4200ppl	HR	High resolution Hall effect output (Hall Effect only)
IECEx & ATEX approved	H1	Explosion proof - Exd with HR Hi-res. Hall option
for injected combustion engines	PF	Pulsating flow option (Hall effect output only)
IECEx & ATEX approved	P1	Explosion proof - Exd with PF pulsating flow option
	E0	EB10 Batch Controller
Scaled pulse, alarm, 4 ~ 20mA	R5	RT14 Flow Rate Totaliser with all outputs (GRN Housing)
IECEx & ATEX approved	R3	Intrinsically safe RT12 (I.s) (GRN Housing)
Faeries indicators are integrally mounted to flowmeter via screw and gasket	F1	F112 in GRP Encl, Non IS, Battery, DC and LP 4to20mA, Linearisation, OC Pulse
	F2	F112 in GRP Encl, IS Appr, Battery, DC and LP 4to20mA, Linearisation, OC Pulse
	F10	F112 in Alu, Non IS, Battery, DC and LP 4to20mA, Linearisation, OC Pulse
	F11	F112 in Alu, IS Appr, Battery, DC and LP 4to20mA, Linearisation, OC Pulse
	F12	F112 in SS Encl, Non IS, Battery, DC and LP 4to20mA, Linearisation, OC Pulse
	F13	F112 in SS Encl, IS Appr, Battery, DC and LP 4to20mA, Linearisation, OC Pulse
	F18	F018 in Alu, Encl, IS Appr, Battery, DC and LP 4to20mA, Linearisation, OC Pulse, HART
	F19	F018 in SS Encl, IS Appr, Battery, DC and LP 4to20mA, Linearisation, OC Pulse, HART
Eseries indicators are integrally mounted to flowmeter via Exd approved line bushing	E10	E112 in Alu, Encl, Exd Appr, Battery, DC and LP 4to20mA, Linearisation, OC Pulse
	E11	E112 in SS Encl, Exd Appr, Battery, DC and LP 4to20mA, Linearisation, OC Pulse
	E18	F018 in Alu, Encl, Exd Appr, Battery, DC and LP 4to20mA, Linearisation, OC Pulse, HART
	E19	F018 in SS Encl, Exd Appr, Battery, DC and LP 4to20mA, Linearisation, OC Pulse, HART
with scaleable pulse output	B2	BT11 dual totaliser (with scaleable pulse output)
IECEX & ATEX approved	B3	I.S. intrinsically safe BT 11 including output
	SB	Specific build requirement

OM GEAR - Large capacity meters

BanksiaControls large capacity flowmeters are suited for receipt verification, loading, un-loading & distribution management at petroleum depots, mine sites, marine, aviation & industrial facilities.

Common applications involve fuels, oils, solvents, alcohols along with the blending of Bio-fuels & ethanol fuels either pumped or gravity fed. The meters are compact & light weight in construction, important benefits when used in mobile installations or within confined spaces.

FEATURES :

- High accuracy & repeatability.
- Measure low & high viscosity liquids.
- Optional mechanical & electronic registers.
- Certified Exd hazardous area versions in all sizes.
- No need for flow conditioning *(straight pipe run etc.)*
- Quadrature pulse output option & bi-directional flow.
- Optional integral check valves.

STANDARD OPTIONS :

Flanged process connections, Explosionproof, Mechanical registers, integral and remote LCD totaliser-batch totaliser, flow rate totalisers, scaled pulse, 4~20mA & flow alarm outputs, electronic batch controllers and pulse processing modules.

GENERAL SPECIFICATIONS

Model prefix:	OM080	OM080E	OM100	OM100E
Nominal size (Inches)	80mm (3")	80mm (3")	100mm (4")	100mm (4")
* Flow range (litres/min)	35 ~ 750	50 ~ 1000	75 ~ 1500	150 ~ 2500
* Flow range (gal/min)	10 ~ 200	13 ~ 260	20 ~ 400	40 ~ 660
Accuracy @ 3cP	+/-0.2% of reading (15:1 turndown) +/-0.5% for 20:1			
Repeatability	typically +/-0.03%			
Temperature Range	-40°C ~ + 120°C (-40F ~ + 250°F)			
Maximum pressure -	(threaded meter)			
Aluminium	12 bar (175 psi)	12 bar (175 psi)	10 bar (150 psi)	
Stainless Steel	12 bar (175 psi)	12 bar (175 psi)	16 bar (240 psi)	
Protection class	IP66/67 (NEMA4X), optional Exd or I.S			
Recommended filtering	350 microns (40 mesh) minimum			
Eletrical -	for pulse meters (see also optional outputs)			
Output pulse resolution	pulses/litre (pulses/US gallon) - nominal			
Reed switch	2.65 (10)	1.55 (5.68)	1.1 (4.15)	0.56 (2.1)
Hall effect	10.65 (40.5)	6.0 (22.7)	4.4 (8.3)	2.24 (8.5)
Quadrature Hall option	5.33 (9.20)	3.0 (11.36)	2.2 (8.3)	1.12 (4.24)
** Reed switch output	30 Vdc x 200mA max.			
Hall effect output	3 wire NPN open collector, 5~24 Vdc, 20MA max.			

Note: Max. flow is to be reduced as viscosity increases, max pressure drop 100kPa. (15psi)

PROCESS	DIM A	DIM A	DIM A	DIM A	DIM D	DIM D
Connections	OM080	OM080E	OM100	OM100E	OM100E, 80E	OM100
ANSI 150 Flange	354	382	388	414	190	229
ANSI 300 Flange	NA	NA	NA	NA	210	254
DIN 16 Flange	354	382	388	414	200	220
BSP Screwed	266	294	294	320	*	*
NPT Screwed	266	294	294	320	*	*

OPTION	DIM C	DIM C	DIM C	DIM C
	OM080	OM080E	OM100	OM100E
E-Series	312	294	457	417
F-Series	286	291	414	414
RT-Series	270	277	315	399
BT11	262	269	205	391
Cap	238	229	283	352

ACCURACY CURVES & PRESSURE DROP

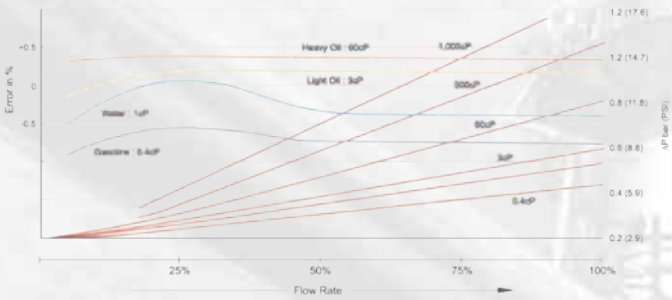

DIMENSIONS

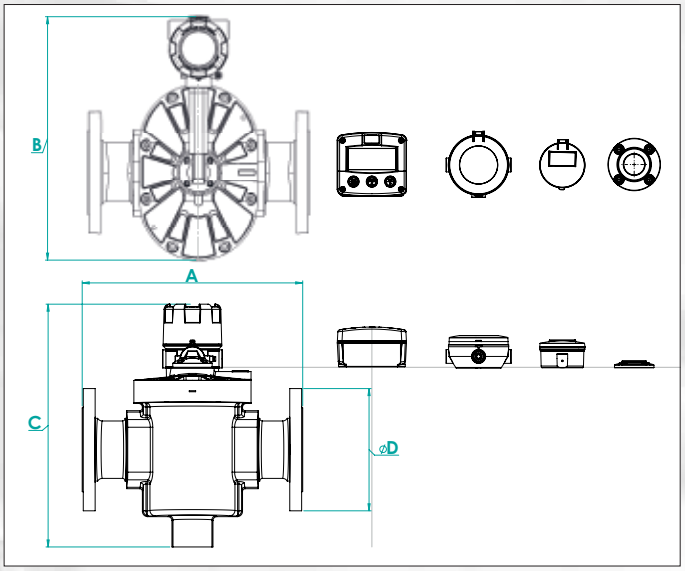

Model No. Example

OM100	S	2	2	1	-	2	1	2	F1

MODEL CODING

OM080	80mm (3")	35-750 L/min	10-200 GPM
OM080	80mm (3" extended flow)	50-1000 L/min	13-260 GPM
OM100	100mm (4")	75-1500 L/min	20-400 GPM
OM100	100mm (4" extended flow)	150-2500 L/min	40-660 GPM

Body material

A	Aluminium
E	Extended flow
S	316/L Stainless Steel (Note: 100mm SS unit only available as extended flow)

Rotor material

0	PPS-Teflon Filled (Polyphenylene Sulfide)
1	Keshi cutting Teflon Filled - PPS rotors
5	Stainless Steel
7	Keishi cutting of Stainless Steel rotors (for high viscosity liquids)

Bearing type

0	No bearing (PPS rotors only)
1	Carbon-Ceramic (Standard with Stainless Steel rotors)

O-ring material

1	Viton (standard); -15°C (+5°F) minimum
2	Ethylene Propylene Rubber (EPR); -40~+120°C (-40°F-+250°F)
3	Teflon encapsulated silicone - application specific; -40°C (-40°F) minimum
4	Buna-N (Nitrile), -40°C~+100°C (-40°F~+212°F)

Temperature limits

2	120°C (250°F) - see note 1
3	*150°C (300°F) max.
5	*120°C (250°F) max. (Includes integral cooling fin) see note 2

Process connections

1	BSP female threaded
2	NPT female threaded
3	*Tri-clamp hygienic ferrules
4	ANSI-150 RF Flanges
5	ANSI-300 RF Flanges
6	PN16 DIN flanges
7	JIS10kg/cm2 flanges
9	Customer nominated

Cable entries

0	3~6mm cable gland
1	M20 x 1.5mm
2	1/2" NPT

Cable entries with B2/B3 options

0	3~6mm cable gland (high pressure meter only)
1	M20 x 1.5mm
2	1/2" NPT

(1) 120°C (250°F) for pulse meters, 80°C (180°F) rating with BT, RT, EB & F series options. See temperature code 5 for higher temperature with BT, RT, & EB
(2) Cooling fin fitted to integral instruments for operation from 80~120°C (180~250°)

Integral options

		Nil
	SS	Stainless Steel Terminal Cover
	RS	Reed Switch only - to suit Intrinsically safe installations
IECEx & ATEX approved	E1	Explosion proof Exd (aluminium & stainless meters)
IECEx & ATEX mines approved	E2	Explosion proof Exd I/IIB T4/T6 (stainless meters only)
not available with high press models	QP	Quadrature pulse (2NPN phased outputs)
IECEx & ATEX approved	Q1	Explosion proof Exd (with quadrature pulse, na with HP meters
OM004:11200ppL, OM006:4200ppl	HR	High resolution Hall effect output (Hall Effect only)
IECEx & ATEX approved	H1	Explosion proof - Exd with HR Hi-res. Hall option
for injected combustion engines	PF	Pulsating flow option (Hall effect output only)
IECEx & ATEX approved	P1	Explosion proof - Exd with PF pulsating flow option
	E0	EB10 Batch Controller
Scaled pulse, alarm, 4 ~ 20mA	R5	RT14 Flow Rate Totaliser with all outputs (GRN Housing)
IECEx & ATEX approved	R3	Intrinsically safe RT12 (I.s) (GRN Housing)
Faeries indicators are integrally mounted to flowmeter via screw and gasket	F1	F112 in GRP Encl, Non IS, Battery, DC and LP 4to20mA, Linearisation, OC Pulse
	F2	F112 in GRP Encl, IS Appr, Battery, DC and LP 4to20mA, Linearisation, OC Pulse
	F10	F112 in Alu, Non IS, Battery, DC and LP 4to20mA, Linearisation, OC Pulse
	F11	F112 in Alu, IS Appr, Battery, DC and LP 4to20mA, Linearisation, OC Pulse
	F12	F112 in SS Encl, Non IS, Battery, DC and LP 4to20mA, Linearisation, OC Pulse
	F13	F112 in SS Encl, IS Appr, Battery, DC and LP 4to20mA, Linearisation, OC Pulse
	F18	F018 in Alu, Encl, IS Appr, Battery, DC and LP 4to20mA, Linearisation, OC Pulse, HART
	F19	F018 in SS Encl, IS Appr, Battery, DC and LP 4to20mA, Linearisation, OC Pulse, HART
Eseries indicators are integrally mounted to flowmeter via Exd approved line bushing	E10	E112 in Alu, Encl, Exd Appr, Battery, DC and LP 4to20mA, Linearisation, OC Pulse
	E11	E112 in SS Encl, Exd Appr, Battery, DC and LP 4to20mA, Linearisation, OC Pulse
	E18	F018 in Alu, Encl, Exd Appr, Battery, DC and LP 4to20mA, Linearisation, OC Pulse, HART
	E19	F018 in SS Encl, Exd Appr, Battery, DC and LP 4to20mA, Linearisation, OC Pulse, HART
with scaleable pulse output	B2	BT11 dual totaliser (with scaleable pulse output)
IECEX & ATEX approved	B3	I.S. intrinsically safe BT 11 including output
	SB	Specific build requirement

BanksiaControls

TURBOPULSE – small & large capacity meters

TM Turbopulse mini & the larger TFM Turbopulse turbine series measure flows of low viscosity liquids from 3 to 7,000,000 litres/hr in a range of sizes from ¼" to 20" (6mm~500mm).

The TM mini series have a tangential rotor with integral flow conditioning ports whilst the TFM series have an axial rotor and flow guides, the TFM series needs to be installed in straight sections of pipe either horizontal or vertical so that the flow is conditioned. The TFM series have Exd & Intrinsically Safe (I.S.) approvals.

Both meter series are robust, compact & take little space in the piping system. Applications include fuels, alcohols, solvents, insecticides, milk, chemicals, water & light hydraulic oils.

FEATURES :

- High accuracy & repeatability.
- Low cost of ownership, wide flow range.
- Rugged & compact design.
- Certified Exd & I.S. hazardous area versions.
- Quadrature pulse output option.
- Integral or remote pre-amplifiers & flow instruments.
- ±0.15% custody transfer models available.

STANDARD OPTIONS :

Flanged process connections, Explosionproof, integral and remote preamplifier, LCD totaliser-batch totaliser, flow rate totalisers, scaled pulse, 4~20mA & flow alarm outputs, electronic batch controllers and pulse processing modules.

GENERAL SPECIFICATIONS

Model prefix :	**TM-Turbopulse mini**	**TFM-Turbopulse**
Nominal sizes	6mm *(1/4" BSPF)*	12~500mm *(1/2"~20")*
Accuracy @ 1cp	±1~2% FSD or ±0.75% o.r.	± 0.5% o.r. *(10:1 turndown)*
Temperature range	5~125ºC *(40~250ºF)*	-40~+240ºC *(-40~+460ºF)*
Maximum pressure		
316 stainless steel	10 bar *(147 psi)*	250 bar (3680 psi) 10cst max.
high pressure SS	N/A	400 bar (5580 psi), 68cst max.
Peek	10 bar *(147 psi)*	N/A
Protection class	IP66/67 (NEMA4X), optional Exd IIB T6 or I.S.	
Electrical (see also optional outputs - Turbopulse pick-off types)		
standard output	Hall effect sensor	Pick-off Coil

FLOW RANGES - *TM Turbopulse Mini*

size	model	litres/min *(GPM)*	Jet Ø
¼"	TM001	0.05~0.5 *(0.01~0.13)*	1mm
¼"	TM002	0.12~1.5 *(0.03~0.4)*	2mm
¼"	TM003	0.2~4.5 *(0.04~1.12)*	3mm
¼"	TM004	0.25~6.5 *(0.05~1.7)*	4mm
¼"	TM005	0.3~10 *(0.08~2.64)*	no jet
¼"	TM006	0.5~15 *(0.13~4)*	6mm

FLOW RANGES - *TFM Turbopulse*

size	model	litres/hr *(GPH)*
½"	TFM010	100~1100 *(0.44~4.4)*
¾"	TFM012	220~2200 *(0.97~9.7)*
¾"	TFM015	400~4000 *(1.77~17.7)*
¾"	TFM020	800~8000 *(3.5~35.2)*
		m3/hr *(GPM)*
1"	TFM025	1.6~16 (7~70)
1½"	TFM040	3.4~34 (15~150)
2"	TFM050	6.8~68 (30~300)
3"	TFM080	13~135 (60~600)
4"	TFM100	27~270 (120~1200)
6"	TFM150	55~550 (240~2400)
8"	TFM200	110~1100 (480~4800)
10"	TFM250	190~1900 (840~8400)
12"	TFM300	270~2700 (1200~12000)
16"	TFM400	400~4000 (1800~18000)

DIMENSIONS

Junction Box, Exd Preamplifier Exd F/I Converter Option

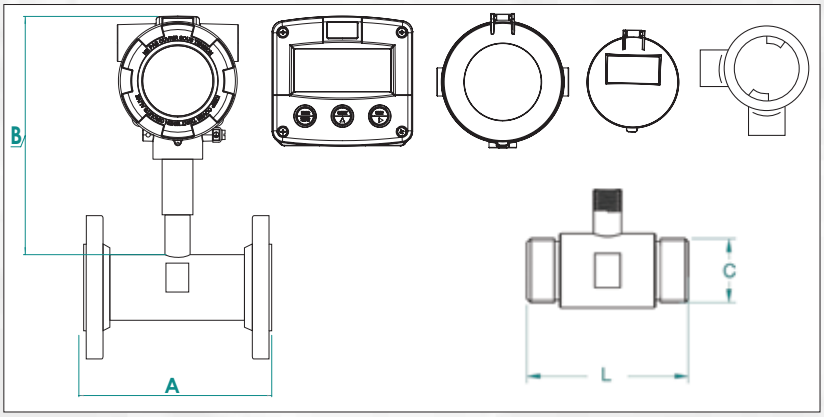

THREADED METERS

Model No.	L (mm)	C
TFM-010	64	1/2" BSP or NPT
TFM-012	64	3/4" BSP or NPT
TFM-015	64	3/4" BSP or NPT
TFM-020	83	3/4" BSP or NPT
TFM-025	89	1" BSP or NPT
TFM-040	115	1 1/2" BSP or NPT

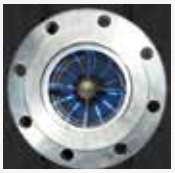

	DIM B	Model No.	DIM A
OPTIONS	Turbine	TFM010	127
E-Series	227	TFM012	127
F-Series	224	TFM015	127
RT-Series	210	TFM020	140
BT11	190	TFM025	152
Junction Box	150	TFM040	178
		TFM050	197
		TFM080	254
		TFM0100	356
		TFM0150	368
		TFM0200	457
		TFM0250	457
		TFM0300	457
		TFM0400	610
		TFM0500	610

TURBOPULSE MODEL CODING

Model	Std Flow Range (M^3/hr)	End Connection Threaded	End Connection Flanged	Dimensions "L" Threaded (mm)	Dimensions "A" Flanged (mm)
TFM0010	0.11-1.1	1/2"	1/2"/DN15	64	150
TFM015S	0.22-2.2	3/4"	3/4" /DN20	64	150
TFM0015	0.4-4.0	3/4"	3/4" /DN20	64	150
TFM0020	0.8-8.0	3/4"	3/4" /DN20	83	150
TFM0025	1.6-16.0	1"	1" /DN25	88	200
TFM0040	3.4-34.0	1.5"	1.5" /DN40	114	200
TFM0050	6.8-68.0	2"	2" /DN50	132	200
TFM0080	13.5-135.0	N/A	3" /DN80	N/A	200
TFM0100	27.0-270.0	N/A	4" /DN100	N/A	300
TFM0150	55.0-550.0	N/A	6" /DN150	N/A	300
TFM0200	110.0-1100.0	N/A	8" /DN200	N/A	350
TFM0250	190.0-1900.0	N/A	10" /DN250	N/A	350
TFM0300	270.0-2700.0	N/A	12" /DN300	N/A	400
TFM0400	400.0-4000.0	N/A	16" /DN400	N/A	610

End Connections Threaded

EB100	Threaded BSP/G Male
EB200	Threaded NPT Male
EB300	Threaded, Special

End Connections Flanged

EFA1X	Flanges, ANSI 150#	EFD1X	Flanges, DIN PN 10
EFA2X	Flanges, ANSI 300#	EFD2X	Flanges, DIN PN 16
EFA3X	Flanges, ANSI 600#	EFD3X	Flanges, DIN PN 25
EFA4X	Flanges, ANSI 900#	EFD4X	Flanges, DIN PN 40
EFA5X	Flanges, ANSI 1500#	EFD5X	Flanges, DIN PN 63
EFA6X	Flanges, ANSI 2500#	EFD6X	Flanges, DIN PN 100

End Connections Face Finish

EFXXF	FF	EFXXR	RF	EFXXJ	RTJ

End Connections Specials

EFSSS	Special Flanges

Material of Contruction

M1X	SS 304 Body
M2X	SS 316 Body
M0X	Special Body Material
MX1	SS 304 Flanges
MX2	SS 316 Flanges
MX3	CS Flanges
MX9	Special Flange Material

Pick-off sensor

P1X	Standard pick-off (Max. Temp. + 120C)
P2X	Hi Temp Pick-off (+240C)
P3X	ATEX approved I.S Pick-off
P4X	Pick-off with integral Amp (PA1001A)
PX1	Millitary Style Connector
PX2	Flying Leads

Integral options

LJB00	IP65 Junction Box
LJB02	ATEX Approved Junction Box
B2	Totaliser
B3	IS Totaliser
R5	RT14 Flow Rate Totaliser with all outputs (GRN Housing)
R3	Intrinsically safe RT12 (I.s) (GRN Housing)
F1	Rate Totaliser, GRP, IP57
F2	IS Rate Totaliser, GRP, IP57
F10	Rate Totaliser, Aluminium, IP67
F11	IS Rate Totaliser, Aluminium, IP6
F12	Rate Totaliser, SS, IP67
F13	IS Rate Totaliser, SS, IP67
F18	IS Rate Totaliser, Aluminium, IP67, HART
F19	IS Rate Totaliser, SS, IP67, HART
E10	Exd Rate Totaliser, Aluminium
E11	Exd Rate Totaliser, Stainless Steel
E18	Exd Rate Totaliser, Aluminium, HART
E19	Exd Rate Totaliser, Stainless Steel, HART
E0	Batch Controller
SB	Special

Model No. Example

TFM025	S	2	2	1	-	2	1	2	F1

BanksiaControls

DUALPULSE – insertion flowmeters

DP490 & DP525 are cost effective stainless steel flowmeters for measuring the flow of water, fuels & other low viscosity liquids in pipes sizes 1.5”~100” *(40~2500mm).*

Insertion flowmeters are installed with the metering head inserted into the pipe resulting in very little pressure drop. They do not require external power when used with the BanksiaControls rate totalisers however some options such as high temperature & non-magnetic models require external power.

Applications include HVAC, hot & chilled water, fire systems, water distribution (management & treatment), boiler feed water & hydrant flow testing.

FEATURES :

- IP68 (NEMA6) submersible 316SS construction.
- Low cost of ownership, wide flow range.
- Rugged & compact design.
- Intrinsically safe hazardous area versions.
- Integral or remote pre-amplifiers & flow instruments.
- DP525 version suitable for “hot tap” installation.
- BI-Directional Flow Measurement

GENERAL SPECIFICATIONS

Model prefix :	**DP490**	**DP525**
Suit pipe sizes	40~900mm *(1.5”~36”)*	50~2500mm *(2”~100”)*
Pipe connection	*1.5” BSP or NPT*	*2” BSP or NPT*
Flow range	0.25 ~ 6300 litres/sec *(4 ~ 99600 USGM)*	0.4 ~ 49000 litres/sec *(6 ~ 780000 USGM)*
Flow velocity range	0.3 ~ 10 metres/sec *(1 ~ 33 feet/sec)*	
Linearity	typically ± 1.5% with well established flow profife	
Temperature range	-40ºC ~ +100ºC *(-40ºF ~ +212ºF) 200ºC max.*	
Maximum pressure	80 bar *(1200 psig)*	
Materials	316SS body & rotor shaft, PVDF rotor	
Pulse outputs		
** Reed switch*	30Vdc x 200mA max. Nom. 0~80hz	
Hall effect	3 wire NPN, 5~24Vdc, 20mA max. Nom. 0~240hz	
Voltage Pulse	self generated voltage. Nom. 0~240hz	
Intrinsically safe coil	self powered, generates 15~3000mV	
High temperature coil	self powered, 200ºC *(390ºF)* max.	
Non magnetic sensor	3 wire NPN, 5~24Vdc, 20mA max. Nom. 0~240hz	
Analog	loop powered 4 ~ 20mA	

** Maximum thermal shock 10ºC (50ºF) / min. applies to the reed switch*

STANDARD INSTALLATION

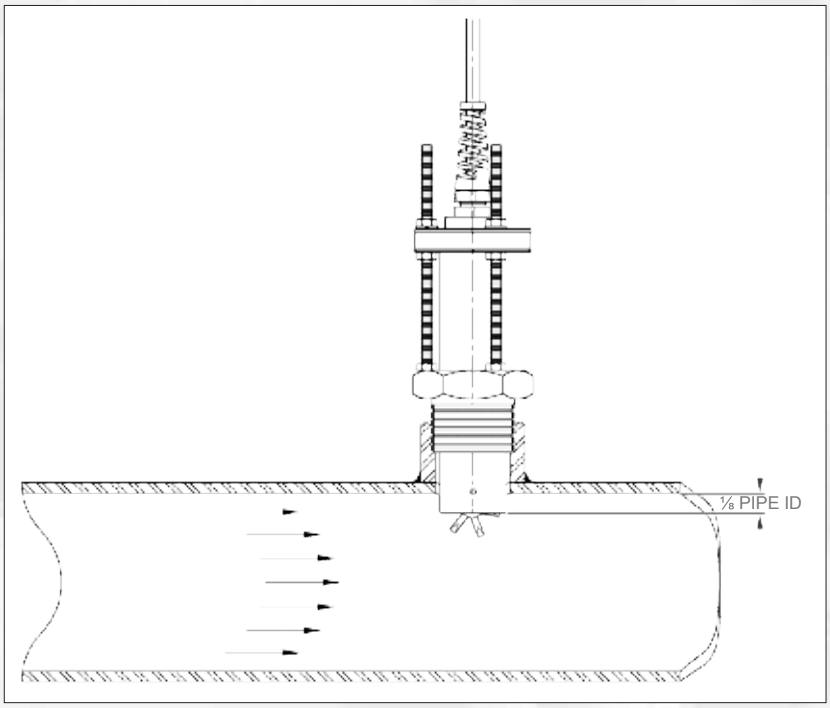

HOT TAP INSTALLATION

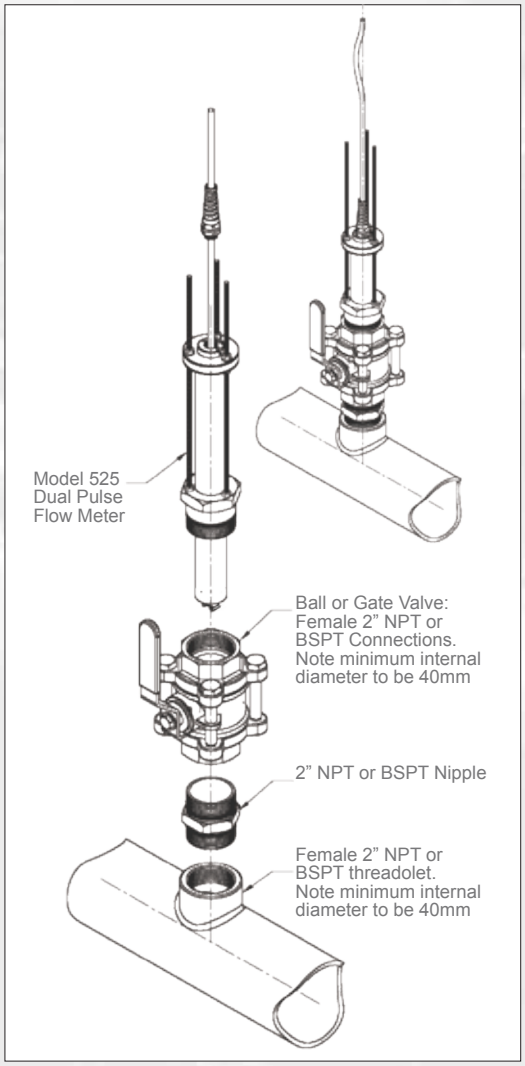

MODEL CODING

DP490	1.5 to 36" pipes *(40 ~ 900mm)*
DP525	2 to 100" pipes *(50 ~ 2500mm)* suitable for "hot-tap" installations

Body material

S	316 Stainless Steel

Rotor & bearing materials

1	PEEK high temperature rotor - 200ºC (390ºF)
2	PVDF rotor - 100ºC (212ºF) max *(standard)*
3	PVDF rotor with hastelloy shaft *(for chlorinated waters)*

O-ring materials

1	Viton *(standard)*, -15~+204ºC *(5~400ºF)*
2	EPR *(Ethylene Propylene Rubber)* for ketones only
3	Teflon encapsulated viton - application specific
4	Buna-N *(Nitrile)*, -65~+125ºC *(-53~+250ºF)*

Temperature limits

5	100ºC (212ºF) standard
2	125ºC (260ºF) - *PEEK rotor only*
3	150ºC (300ºF) - NPN output & *PEEK rotor only*
6	200ºC (390ºF) *with output type 6 coil & PEEK rotor*

Process connections

1	BSPT - *1½"M (DP490), 2"M (DP525)*
2	NPT - *1½"M (DP490), 2"M (DP525)*
3	2" BSPT male thread on the DP490
4	2" NPT male thread on the DP490

Pick-up type

1	NPN hall effect & voltage pulse *(standard)*
2	NPN open collector(s)
3	Reed switch only *(I.S. applications)*
4	Non magnetic rotor with NPN output
5	Non magnetic rotor with I.S. coil output
6	High temp. 200ºC *(390ºF)* coil output
7	Non magnetic rotor for 125ºC *(255ºF)*

Electrical connections

1	3 metre (10ft) cable *(std)*
2	10 metre (33ft) cable
3	20 metre (66ft) cable
4	50 metre cable (164ft)
5	Terminal box on stem kit
6	Stem kit

Integral options

	QP	
Scaled pulse, alarm, 4 ~ 20mA	**R5**	RT14 Flow Rate Totaliser with all outputs (GRN Housing)
IECEx & ATEX approved	**R3**	Intrinsically safe RT12 (I.s) (GRN Housing)
F series indicators are integrally mounted to flowmeter via stem kit	**F1**	Quadrature pulse output (requires PD2 for bi-directional flow capability)
	F2	F112 in GRP Encl, Non IS, Battery, DC and LP 4to20mA, Linearisation
	F10	F112 in Alu, Encl, Non IS, Battery, DC and LP 4to20mA, Linearisation
	F11	F112 in Alu, Encl, IS Appr, Battery, DC and LP 4to20mA, Linearisation
	F12	F112 in SS Encl, Non IS, Battery, DC and LP 4to20mA, Linearisation
	F13	F112 in SS Encl, IS Appr, Battery, DC and LP 4to20mA, Linearisation
	F18	F018 in Alu, Encl, IS Appr, Battery, DC and LP 4to20mA, Linearisation, HART
	F19	F018 in SS Encl, IS Appr, Battery, DC and LP 4to20mA, Linearisation, HART
with scaleable pulse output	**B2**	BT11 dual totaliser (with scaleable pulse output)
IECEX & ATEX approved	**B3**	I.S intrinsically safe BT11 including output (2)
	E0	Ecobatch DC powered two stage batch controller

Model No. Example

DP490	**S**	**2**	**2**	**1**	**-**	**2**	**1**	**2**	**F1**

MULTIPULSE MP – Oscillating piston meters

The MP series has long been established as a simple but reliable metering principal providing high levels of accuracy & repeatability for a wide range of liquids from extremely viscous lubricants, chemicals & food bases to non conductive solvents & fuels.

Applications include alcohols, acetic acid, caustic soda, ethanol, fuels, grease, glucose, ink, insecticides, latex emulsions, liquid sugar, margarine, mayonnaise, molasses, resin, tallow, urethane, water, xylene & liquid yeast *(refer page 21 for further applications)*.

FEATURES :

- Insensitive to mounting orientation.
- Measure low & high viscosity liquids.
- Has only one moving part *(oscillating piston)*.
- Certified Exd hazardous area versions in all sizes.
- No need for flow conditioning *(straight pipe run etc.)*.

STANDARD OPTIONS :

Flanged and hygienic process connections, Explosionproof, integral and remote LCD totaliser-batch totaliser, flow rate totalisers, scaled pulse, 4~20mA & flow alarm outputs, electronic batch controllers and pulse processing modules.

GENERAL SPECIFICATIONS

Model prefix :	**MP010**	**MP015**	**MP020**	**MP025**	**MP040**	**MP050**
Nominal size mm (")	10 *(3/8")*	15 *(1/2")*	20 *(3/4")*	25 *(1")*	40 *(1.5")*	50 *(2")*
Flow range (litres / min)	0.2~10	0.2~10	2~50	2~50	4~140	12~330
Flow range (USG / min)	0.05~2.7	0.05~2.7	0.5~13	0.5~13	1.1~37	3.2~90
Accuracy @ 3cp	* ±1% o.r.		± 0.5% of reading			
Improved accuracy	± 0.2% of rate with optional NL correction					
Repeatability	typically ± 0.03%					
Temperature range	-40ºC ~ +200ºC *(-40ºF ~ +390ºF)*					
Maximum pressure (threaded meters)	bar *(PSI)*					
aluminium	-	30 *(440)*	-	80 *(1200)*	30 *(440)*	20 *(300)*
316L stainless	-	100 *(1500)*	-	100 *(1500)*	100 *(1500)*	27 *(380)*
high pressure stainless	-	350 *(5150)*	-	200 *(2950)*	250 *(3700)*	-
UPVC (SAP meters)	4 *(60)*	-	4 *(60)*	-	-	-
Protection class	IP66/67 (NEMA4X), optional Exd IIB T6 or I.S.					
Recommended filtering	150 microns *(100 mesh)* minimum					
***Electrical** - for pulse meters (see also optional outputs)*						
Output pulse resolution	pulses / litre *(pulses / US gallon)*					
Reed switch	200 *(760)*	200 *(760)*	20 *(76)*	20 *(76)*	7.3 *(28)*	2.5 *(9.5)*
Hall effect	400 *(1520)*	400 *(1520)*	100 *(380)*	100 *(380)*	44 *(167)*	20 *(76)*
*** Reed switch output*	30Vdc x 200mA max.					
Hall effect output (NPN)	3 wire open collector, 5~24Vdc, 20mA max.					

** Within nominal spans of MP015 (0.2~1.7, 1.7~5 & 5~10 litres/min)*

DIMENSIONS

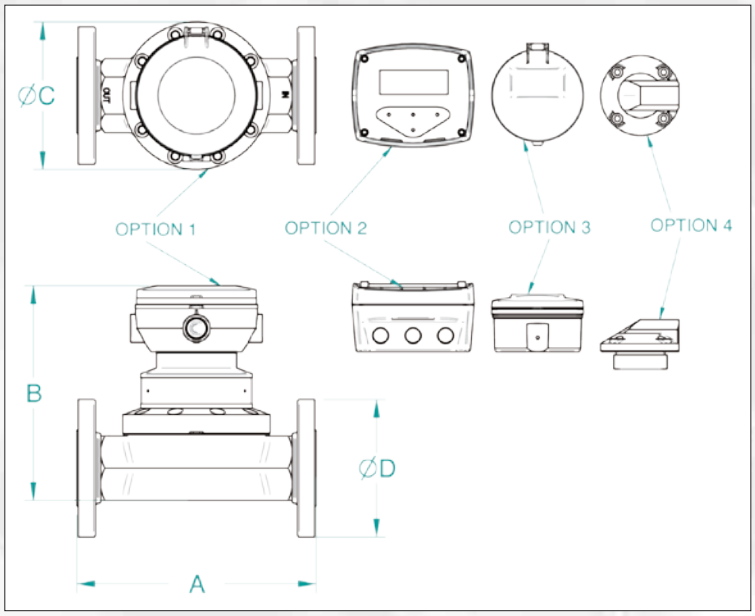

Connections	A				ØC			
	MP015	MP025	MP040	MP050	MP015	MP025	MP040	MP050
ANSI 150 Flange	132	152	224	253	89	108	127	152
ANSI 300 Flange	145	170	239	268	95	124	156	165
DNI 16 Flange	140	165	235	258	95	115	150	165
DNI 40 Flange	144	173	253	270	95	115	150	165
BSP Screwed	100	117	175	202	-	-	-	-
NPT Screwed	100	117	175	202	-	-	-	-

All dimensions in millimeters +/- 2mm

Option Fitted	MP015	MP025	MP040	MP050
1	143	179	201	234
2	134	170	192	225
3	147	183	205	238
4	111	147	169	204
ØC	75	98	140	168

MP SERIES PRESSURE DROP CURVES @ 1cp VISCOSITY

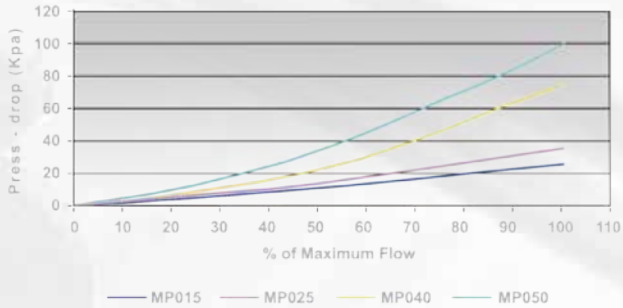

(1) 120ºC (250ºF) for pulse meters, 80ºC (180ºF) rating with BT, RT, F series & EB options. See temperature code 5 for higher temperature with BT, RT, & EB

(2) Cooling fin fitted to integral instruments for operation from 80~120ºC (180~250º)

MODEL CODING

MP010P	3/8"	(10mm)	UPVC only
MP015	1/2"	(15mm)	Alum. & stainless
MP020P	3/4"	(20mm)	UPVC only
MP025	1"	(25mm)	Alum. & stainless
MP040	11/2"	(40mm)	Alum. & stainless
MP050	2"	(50mm)	Alum. & stainless

Body material

- A Aluminum
- S 316 Stainless Steel
- H High Pressure 316 stainless
- P UPVC (5 bar max, 40ºC max)

Piston material

- 2 PEEK - optional in all meters - 150ºC (300ºF) max.
- 3 PTFE - standard in all meters - 120ºC max. (250ºF)
- 9 Special materials - eg. for 200ºC (400ºF)

Partition material

- 1 Ceramic (for abrasive liquids)
- 2 316 Stainless Steel (standard)

O-ring material

- 1 Viton (standard) -15~+200ºC (-5~+400ºF)
- 2 Ethylene Propylene Rubber -150ºC (300ºF) max.
- 3 Teflon encapsulated viton -150ºC (300ºF) max.
- 4 Buna-N (Nitrile) -65~+100ºC (-53~+212ºF)

Temperature limits

- - 1 60ºC (140ºF)
- - 2 120ºC (250ºF) - see note 1
- - 3 150ºC (300ºF) - PEEK piston, NPN output
- - 4 40ºC (100ºF) - UPVC meters
- - 5 120ºC (250ºF) - see note 2
- - 6 200ºC (400ºF) - coil output

Process connections

- 1 BSP (RP) female threaded
- 2 NPT female threaded
- 3 * Tri-clamp hygienic ferrules
- 4 ANSI-150 RF flanges
- 5 ANSI-300 RF flanges
- 6 PN16 DIN flanges

*Triclamp ferrules are 1/2" larger than the meter size

Cable entries

- 0 3~6mm cable gland - with B2 & B3 options only
- 1 M20 x 1.5mm
- 2 1/2" NPT

Model No. Example

MP015	S	2	2	1	-	2	1	2	F1

Integral options

		Nil
	SS	Stainless Steel Terminal Cover
	RS	Reed Switch only - to suit Intrinsically safe installations
IECEx & ATEX approved	E1	Explosion proof Exd IIB T4/T6 (aluminium & stainless meters)
IECEx & ATEX mines approved	E2	Explosion proof Exd I/IIB T4/T6 (stainless meters only)
not available with high press models	QP	Quadrature pulse (2NPN phased outputs)
IECEx & ATEX approved	Q1	Explosion proof Exd (with quadrature pulse, na with HP meters
OM004:11200ppL, OM006:4200ppl	HR	High resolution Hall effect output (Hall Effect only)
IECEx & ATEX approved	H1	Explosion proof - Exd with HR Hi-res. Hall option
for injected combustion engines	PF	Pulsating flow option (Hall effect output only)
IECEx & ATEX approved	P1	Explosion proof - Exd with PF pulsating flow option
	E0	EB10 Batch Controller
Scaled pulse, alarm, 4 ~ 20mA	R5	RT14 Flow Rate Totaliser with all outputs (GRN Housing)
IECEx & ATEX approved	R3	Intrinsically safe RT12 (I.s) (GRN Housing)
Fseries indicators are integrally mounted to flowmeter via screw and gasket	F1	F112 in GRP Encl, Non IS, Battery, DC and LP 4to20mA, Linearisation, OC Pulse
	F2	F112 in GRP Encl, IS Appr, Battery, DC and LP 4to20mA, Linearisation, OC Pulse
	F10	F112 in Alu, Non IS, Battery, DC and LP 4to20mA, Linearisation, OC Pulse
	F11	F112 in Alu, IS Appr, Battery, DC and LP 4to20mA, Linearisation, OC Pulse
	F12	F112 in SS Encl, Non IS, Battery, DC and LP 4to20mA, Linearisation, OC Pulse
	F13	F112 in SS Encl, IS Appr, Battery, DC and LP 4to20mA, Linearisation, OC Pulse
	F18	F018 in Alu, Encl, IS Appr, Battery, DC and LP 4to20mA, Linearisation, OC Pulse, HART
	F19	F018 in SS Encl, IS Appr, Battery, DC and LP 4to20mA, Linearisation, OC Pulse, HART
Eseries indicators are integrally mounted to flowmeter via Exd approved line bushing	E10	E112 in Alu, Encl, Exd Appr, Battery, DC and LP 4to20mA, Linearisation, OC Pulse
	E11	E112 in Alu, SS Encl, Exd Appr, Battery, DC and LP 4to20mA, Linearisation, OC Pulse
	E18	F018 in Alu, Encl, Exd Appr, Battery, DC and LP 4to20mA, Linearisation, OC Pulse, HART
	E19	F018 in SS Encl, Exd Appr, Battery, DC and LP 4to20mA, Linearisation, OC Pulse, HART
with scaleable pulse output	B2	BT11 dual totaliser (with scaleable pulse output)
IECEX & ATEX approved	B3	I.S. intrinsically safe BT 11 including output
	SB	Specific build requirement

UTILITY – tangential flowmeters

The UM series is specifically engineered for the most common liquid transfer and monitoring applications within industrial plants, mining sites, automotive service centers and refueling installations.

Monitoring & controlling the movements of water, fuels & other low viscosity liquids under pumped or gravity conditions in small pipe sizes is widespread. The UM flowmeter provides a cost effective & reliable solution with a variety of versatile options.

FEATURES :

- High accuracy & repeatability.
- Low cost of ownership, wide flow turndown.
- Rugged & compact design.
- Intrinsically safe hazardous area versions.
- Integral flow conditioning & strainer.

STANDARD OPTIONS :

LCD totaliser-batch totaliser, flow rate totalisers, scaled pulse, 4~20mA & flow alarm outputs, packaged electronic batch control system and pulse processing modules.

GENERAL SPECIFICATIONS

Model prefix :	**Flowmeter**	**Batch system**
Nominal size	20mm *(3/4" BSP or NPT male threaded)*	
Flow range	1 ~ 70 litres/min *(0.3 ~ 18 USGM)*	
Accuracy	± 1.5% of reading *(70:1 turndown)* ± *0.5% for 20:1*	
Temperature range	5ºC ~ 90ºC *(40ºF ~ +194ºF) - 10bar (150psi)*	
Maximum pressure	10 bar *(150 psig)*	
Power requirement	self powered or 5~30Vdc	24Vdc
Protection class	IP 66.67, optional I.S.	IP 66/67 *(NEM A 4X)*
Materials	brass body, PP impeller with ruby bearing	
Electrical (see also optional outputs)		
Output pulse resolution	Reed switch & Hall Effect	20 PPL (76 PPG)
** Reed switch output*	30Vdc x 200mA max.	
Hall effect output	3 wire NPN open collector, 5~24Vdc, 20mA max.	

** Maximum thermal shock 10ºC (50ºF) / min. applies to the reed switch*

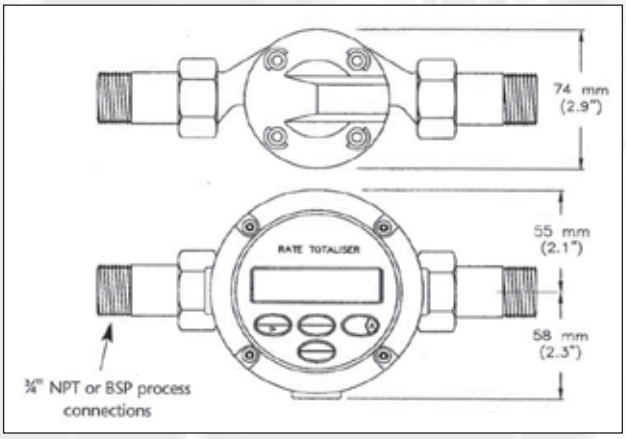

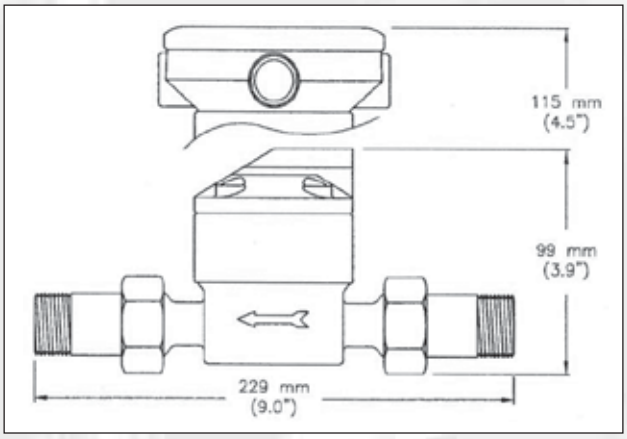

HIGH PRESSURE METERS

BanksiaControls produce a number of meters for various high pressure applications within the exploration, hydraulic, lubrication, marine & mining industries. From the flow range chart opposite one can select a particular meter which best suits their piping & flow range requirements.

BanksiaControls standard high pressure meters are stainless steel; intermediate pressure meters in alternate materials are produced to suit the specific needs of the customer.

SPECIFIC BUILD METERS

It is not uncommon for a customer to have a flow application which requires a tailored solution. BanksiaControls maintains a "specific build" register of the many flowmeter design variations which have been provided to customers over the past 20 years.

Design variables have included special process & electrical connections, high temperature meters, sub sea meters, tropicalised electronics & many other non standard constructions in accordance with the customers specific requirements.

STANDARD OPTIONS :

Integral and remote preamplifier, LCD totaliser-batch totaliser, flow rate totalisers, scaled pulse, 4~20mA & flow alarm outputs, electronic batch controllers and pulse processing modules.

HIGH PRESSURE OVAL PD METERS *(for all viscosities)*

Flow range	Pressure	Size	Model	Page
Litres/hr (GPH)	*bar (PSIG)*			
0.5~36 *(0.13~9.5)*	400 *(5580)*	4mm *(1/8")*	OM004H	6
2~100 *(0.5~27)*	400 *(5580)*	6mm *(1/4")*	OM006H	6
15~550 *(4~145)*	400 *(5580)*	6mm *(1/4")*	OM008H	6
Litres/min (GPM)				
1~40 *(0.26~10.6)*	400 *(5580)*	15mm *(1/2")*	OM015H	8
10~150 *(2.6~40)*	400 *(5580)*	25mm *(1")*	OM025H	8
15~250 *(2.6~66)*	400 *(5580)*	40mm *(1.5")*	OM040H	8
30~450 *(4~120)*	300 *(4410)*	50mm *(2")*	OM050H	8

HIGH PRESSURE TURBINE METERS *(maximum viscosity 65cst)*

Flow range	Pressure	Size	Model	Page
Litres/min (GPM)	*bar (PSIG)*			
13~133 *(3.5~35)*	400 *(5580)*	20mm *(3/4")*	TP020H	12
27~270 *(7~70)*	400 *(5580)*	25mm *(1")*	TP025H	12
57~570 *(15~150)*	400 *(5580)*	40mm *(1.5")*	TP040H	12

Oval PD Meters and Turbines available to 700ber (10,000PSI).
Please consult factory for furthr details.

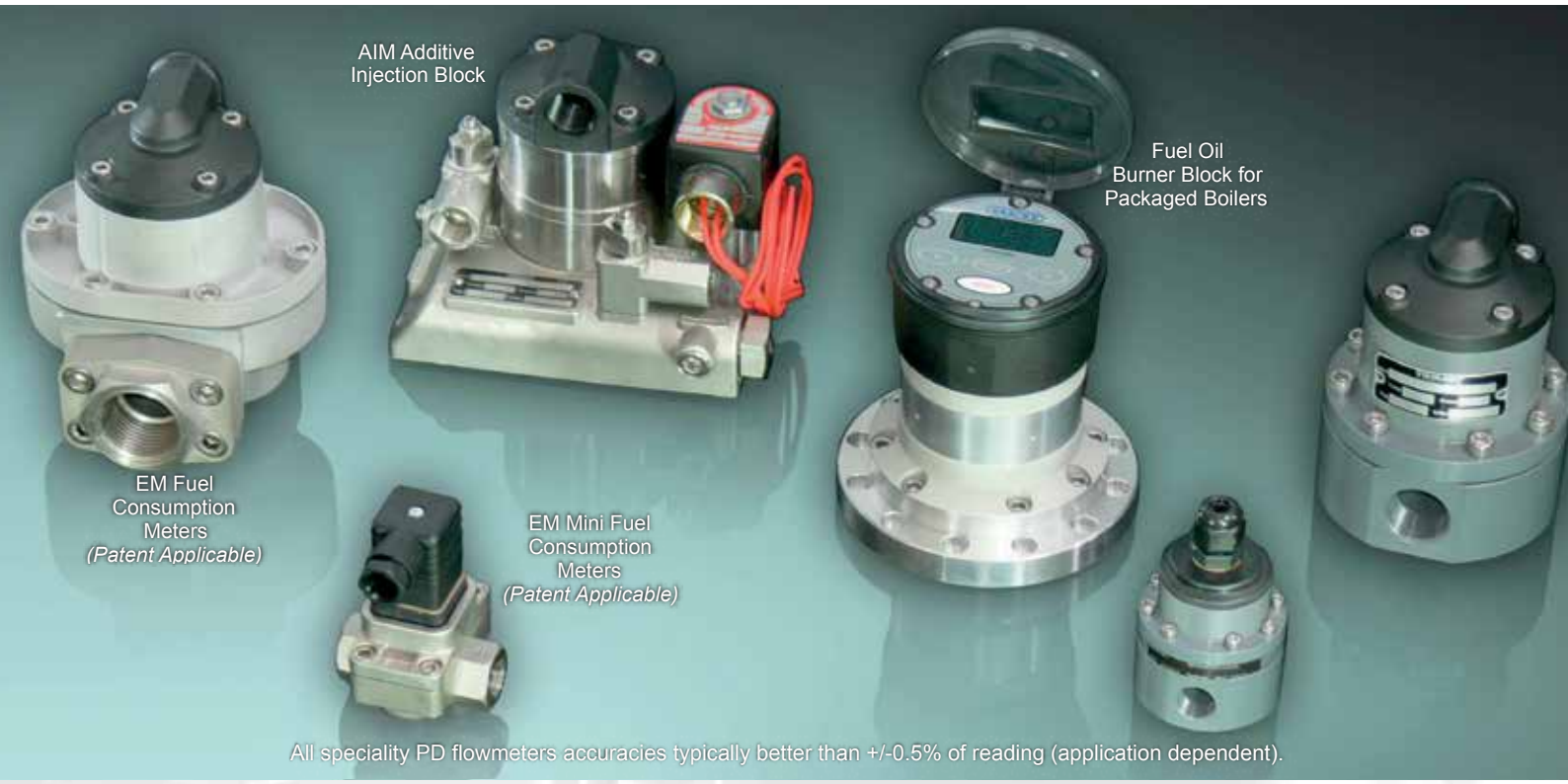

All speciality PD flowmeters accuracies typically better than +/-0.5% of reading (application dependent).

AIM – additive injection manifold

AIM block is a compact all stainless steel manifold assembly complete with isolating, flow regulating & check valves, a fine mesh strainer, solenoid valve & a precision oval gear flowmeter.

AIM injects small amounts of modifying additives & performance enhancing agents into fuels & base product, these include lubricants, dyes, colorings, denaturants, detergents, odorizing, anti-freeze, anti-corrosion, anti-static, anti-detonating, anti-icing, anti-foaming and emulsifiers.

AIM general specifications

Model prefix :	**AIM004**	**AIM006**	**AIM008**
Process connections	3/8"NPT elbows, 3 x 90° orientation positions		
Flow range *litres / min*	0.01 ~ 1.0	0.03 ~ 1.66	0.25 ~ 10
US gal / min	*0.002 ~ 0.27*	*0.008 ~ 0.44*	*0.07 ~ 2.65*
Pulse / Litre	*2800 (11220)*	*1050 (4200)*	*710*
Pulse / US gal (Optional)	*10600 (42470)*	*4000 (15900)*	*2*

FUEL CONSUMPTION METERS

BanksiaControls compact fuel consumption meters are specifically designed for fuel flow in open & return loop fuel injection systems, they provide accurate instantaneous fuel consumption readings on petrol, diesel & fuel oil fired engines of all sizes. A special feature is available which offsets the effects of flow pulsations from injectors.

EM & FM fuel consumption meters

Model prefix :	**EM006A**	**EM008A**	**EM020**	**EM025**
Normal size	5mm (1/4")	8mm (3/8")	20mm (3/4")	25mm (1")
Flow range *litres / hr*	2 ~ 100	15 ~ 550	60 ~ 2400	120 ~ 6000
US gal / hr	*(0.5 ~ 27)*	*(4 ~ 145)*	*(16 ~ 630)*	*(30 ~ 1600)*
Engine size to	500 HP	2800 HP	12000 HP	30000 HP

BURNER BLOCKS – for packaged boilers

Boiler manufacturers generally supply a fuel consumption flow meter as part of their package. BanksiaControls can produce a meter with a base footprint which attaches directly to the manufacturers combustion head thereby avoiding the need for external piping.

BURNER BLOCK general specifications

Model prefix :	**BB025**
Flow range *(fuel oil)*	1 ~ 50 liters/min *(0.26 ~ 13.2 USGM)*
Materials	Aluminum or 316 Stainless Steel

BanksiaControls has a range of flow instrumentation to complement its range of flowmeters. We have units available in plastic and aluminium IP67 enclosures for remote, integral, or panel mount applications. We can supply these same indicators as non hazardous or suitable for intrinsically safe applications. We can also supply a rate totaliser in Exd explosion proof enclosures and suited to integral or remote mount applications if used with appropriately approved line bushing, or potted cable glands and cabling. We have products available with a range of functions including:

- Flow Rate Indicatior/Totaliser with Linearisation, pulse and analog outputs
- Flow Rate Indicatior/Totaliser with Linearisation, pulse and analog outputs, and HART protocol
- Ratio Monitor
- Flow Rate Controller
- Ratio Controller
- Fuel Consumption Flow Computer
- Batch Controller
- Delivery Controller

Model Example

F112	P	AP	CX	HA	J		OT	PB	PD	XI	ZX	with IMF option
E018	P	AP	CR	HS	G	IB	OT	PB	PD	XD	ZB	with IMF option

Model	Function
F018	Flow Rate Indicator/Totaliser with linearisation and passive analog/pulse signal outputs, and HART communications
F112	Flow Rate Indicator/Totaliser with linearisation and passive analog/pulse signal outputs
F114	Ratio Monitor/Totaliser with High/Low alarm, passive analog output
F120	Flow Rate Controller with analog control output, and high/low alarms
F124	Ratio Controller with analog control output and high/low alarms
F127	Fuel Consumption Flow Computer with temperature compensation for corrected liquid volume and pulse signal output
F130	Two stage batch controller with pulse output - not available with IS option
F131	Two stage batch controller with pulse and analog outputs - not available with IS option
F132	Two stage batch controller with printer driver - not available with IS option
F133	Delivery Controller with pump start and valve control outputs - not available with IS option
E018	Flow Rate Indicator/Totaliser with linearisation and passive analog/pulse signal outputs, and HART communications
E112	Flow Rate Indicator/Totaliser with linearisation and passive analog/pulse signal outputs

Input Type

P	Pulse Input type
A	Analog Input type (pending for E Series)

Analog Output

AX	No analog output - standard with F130, F132 and F133, not available with F112, F114, F120, F124, F127, E018, E112
AP	Passive Loop Powered 4 -20mA output - Not available with F130, F132, F133, E018, E112, standard with F112, F114, F120, F124, F127
AH	Galvanically Isolated Loop Powered 4 -20mA output - only available with F018, E018, and E112

Enclosure Type

HG	GRP Glass Reinforced Plastic (Not Available with E series units)
HA	Aluminium - powder coated
HS	Stainless Steel - Pending for F series

Thread Type

J	3x Metric M20 (Not Available with E series units)
U	3x 1/2" NPT adaptors (Not Available with E series units)
G	2x Metric M20, 1x M25 (Not Available with F series units)
D	2x 1/2" NPT, 1x 3/4" NPT (Not Available with F series units)

Additional Inputs

IB	Remote input to reset total or to lock the "clear total" button - standard on E series units (Not Available with F series units)

Output Options

OT	Open collector output - standard on all units
OR	Mechanical Relay Output - not available with F018, E018, E112

Battery Requirements

	No Battery - leave blank (Not Available with E series units)
PB	Lithium battery powered - not available on F130, F131, F132, F133, standard on all other non IS devices
PC	Lithium battery powered - not available on F130, F131, F132, F133, E018, E112, standard on all other IS devices

Power Supply

PD	DC - 16-30V DC. Sensor supply: 8.2, 12 or 24V DC With IS option: Sensor supply: 8.2 V or input volt
PM	115-230V AC. Sensor supply 8.2, 12 or 24V DC (max. 400mA) - not available with the F018, E018, E112, not available with XI option

Hazardous Approval

XX	Safe area - Non Hazardous areas only
XI	Intrinsically safe - ATEX, IECEX, CSA, FM
XD	Exd rated, ATEX, IECEX approved (Not available with F Series units) - standard for E series units

Backlighting

ZX	No Backlighting (Not Available with E series units)
ZB	Backlighting - not available with XI option

Mounting Type - And add the following mounting kit

IMF	Integrally Mounted to flowmeter - only available with DC powered F018, F112, E018, E112 units
PMK	Panel Mount IP67 unit (Pipe Mount Kit with E series units)
WMK	Wall Mount IP67 unit with wall mounting kit

BanksiaControls

WAFER/THREADED MANIFOLD & FLANGE ADAPTORS

BanksiaControls has a range of wafer style flange manifolds and threaded manifolds for its smaller sized positive displacement flowmeters, as well as, flange adaptors for its medium and large sized positive displacement meters.

The wafers are available in both ANSI and DIN standards in a range of sizes, as are the flange adaptors. Other standards and size of flanges are available on request.

The threaded manifold adaptors are available with NPT or MP Autoclave threads in a range of sizes. Other thread standards and sizes are available on request.

The wafer and threaded manifolds have been designed specifically for our manifold style small oval gear flowmeters, where the inlet and outlet holes are located on the base of the meter.

The flange adaptors have been designed for our medium and large sized oval gear flowmeters where mostly an SAE companion flange is used to provide for different process connections.

Manifold Type		Flowmeter Size Selection										
TM	Threaded manifold (Ref. to thread options below)	004/H	008									
		006/H	008H									
WM	Wafer Manifold Selection (Ref. to flange options below)*	004/H	008									
		006/H	008H									
FS	Flanged Spool Pieces - convert wafer to old style manifold installations (Refer to flange options below)	004/H	008									
		006/H	008H									
FA	Flange Adaptors - adapt larger sized meters to varying flange sizes			015	25	40	50	50E	80	80E	100	100E
SP	Special - Customer nominated	consult factory for specific build options										

* wafer includes rated flange bolts, nuts and washers in 304SS

Flange/ Thread selection	A: Denotes availability of selection											
T	Threaded manifold	A	A									
A	ANSI	A	A	A	A	A	A	A	A	A	A	A
D	DIN	A	A	A	A	A	A	A	A	A	A	A
J	JIS	A	A	A	A	A	A	A	A	A	A	A
S	Special	consult factory for specific build options										

T	Thread type											
B	BSPP (G) female threaded manifold	A	A									
N	NPT female threaded manifold	A	A									
A	MP Autoclave threaded manifold - female	A	A									
S	Special consult factory	CF	CF									

A	ANSI											
1	ANSI-150	A	A	A	A	A	A	A	A	A	A	A
2	ANSI-300	A	A	A	A	A	A	A				
3	ANSI-600	A	A	A	A	A	A					
4	ANSI-900	A	A	A	A	A	A					
5	ANSI-1500	A	A	A	A	A	A					
6	ANSI-2500	A	A	A	A	A						
S	Special	consult factory for specific build options										

D	DIN											
1	DIN, PN16/25	A	A	A	A	A	A	A	A	A	A	A
2	DIN, PN-40	A	A	A	A	A	A	A	A	A	A	A
S	Special	consult factory for specific build options										

J	JIS											
1	JIS, 10K	A	A	A	A	A	A	A	A	A	A	A
2	JIS, 20K	A	A	A	A	A	A	A	A	A	A	A
S	Special	consult factory for specific build options										

S Special - Consult Factory

Flange Face												
T	Thread only											
1	RF	A	A	A	A	A	A	A	A	A	A	A
2	RJT	A	A									
3	RJT - only applicable to ANSI600, 900, 1500 and 2500 flanges	A	A									
9	Other	consult factory for specific build options										

Flange/Thread size												
18	1/8"	A	A									
14	1/4"	A	A									
38	3/8"	A	A									
12	1/2"	A	A		A							
96*	9/16" MP Autoclave * thread only	A	A									
34	3/4"	A	A	A								
10	1"	A	A			A	A	A				
15	1 1/2"	A	A	A	A		A	A				
20	2"	A	A	A	A	A			A	A	A	A
25	2 1/2"						A	A				
30	3"				A	A	A	A			A	A
40	4"				A	A	A	A	A	A		
50	5"											
60	6"										A	A
99	Special	consult factory for specific build options										

Examples

TM004H	T	N	T	12	Threaded manifold for an OM004H meter with 1/2" NPT Female process connections
WM006H	A	6	3	15	Wafer Manifold for an OM006H meter with 1.5" ANSI2500RTJ flanged process connection
FA050	D	2	1	34	Flange adaptor for OM050 meter with DIN M20 (3/4"), PN40 flanged process connections

VISCOUS LIQUID BEHAVIOUR

The viscosity of a liquid is proportional to its resistance to shear. Of the three categories of viscosity *(see opposite)* Newtonians are most typical and include petroleum fluids, water & similar chemicals.

Most empirical test data for flowmeters and pumps has been developed using Newtonian liquids. When working with Non-Newtonian liquids we use the expression "effective viscosity" in terms of the liquid after it has been pre-sheared by the pump and subsequent movement through the pipe , in these instances it is not unusual for the effective viscosity to be many times less than the theoretical viscosity thereby lessening the pressure drop across the meter.

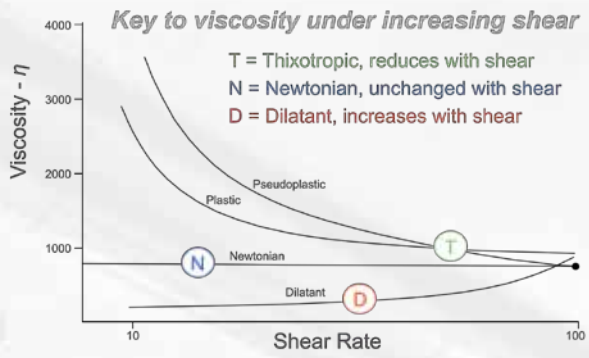

TYPICAL METERED LIQUIDS & VISCOSITY TYPES

Centistokes x SG = Centipoise (cp) **Centipoise / SG Centistokes (cSt)**

Liquid	SG	cp	Key
ADHESIVES			
Box Adhesives	1.00	3000	T
PVA	1.30	100	T
BAKERY			
Butter - melted	0.98	18 @ 60°C	N
Egg, Whole	0.50	60 @ 10°C	N
Frosting	1.0	10000	T
Lecithin		3250 @ 50°C	T
Condensed Milk	1.30	10000 @ 25°C	N
Yeast Slurry 15%	1.00	180	T
BEER			
Beer	1.00	1.1 @ 5°C	N
Yeast 80% solids		16000 @ 5°C	T
CONFECTIONARY			
Caramel	1.20	400 @ 60°C	
Chocolate	1.10	17000 @ 50°C	T
Fudge, Hot	1.10	36000	T
Toffee	1.20	87000	T
COSMETICS, SOAPS			
Face Cream		10000	T
Hair Gel	1.40	5000	T
Shampoo		5000	T
Toothpaste		20000	T
Hand Cleanser		20000	T
DETERGENTS			
Concentrate		10	N
DYES & INKS			
Ink, Printers	1.38	10000	T
Dye	1.10	10	N
Solvents	0.8~0.9	0.5 to 10	N

Liquid	SG	cp	Key
DAIRY			
Cottage Cheese	1.08	225	N
Creme	1.02	20 @ 5°C	D
Milk	1.0	1.2 @ 15°C	T
Cheese, Process		30000 @ 70°C	N
Yogurt		1100	T
FATS & OILS			
Corn Oil	0.92	30	N
Lard	0.92	60 @ 40°C	N
Linseed Oil	0.93	30 @ 40°C	N
Peanut Oil	0.92	42 @ 40°C	N
Soybean Oil	0.95	36 @ 40°C	N
Vegetable Oil	0.92	3 @ 150°C	N
FOODS			
Black Bean Paste		10000	T
Cream Style Corn		130 @ 90°C	T
Tomato Sause	1.11	560 @ 60°C	T
Tomato Paste 33%	1.14	7000	T
Pablum		4500	T
Pear Pulp		4000 @ 70°C	T
Potato Mashed	1.00	20000	T
Prune Juice	1.00	60 @ 50°C	T
Orange Juice Conc	1.10	5000 @ 3°C	T
Mayonnaise	1.00	5000 @ 24°C	T
Honey	1.50	15000 @ 40°C	T
PAINT			
Auto Paint		20000	T
Solvents	0.8~0.9	0.5 to 10	N
Varnish	1.06	140 @ 40°C	T
Turpentine	0.86	2 @ 15°C	N

Liquid	SG	cp	Key
PAPER & TEXTILES			
Black Liquor tar		2000 @ 150°C	
Paper Coating 35%		400	
Sulfide 6%		1600	
Black Liquor	1.30	1100 @ 50°C	
Black Liquor Soap		7000 @ 50°C	
PETROLEUM			
Bitemen		60 @ 180°C	
Gasoline	0.70	0.8 @ 15°C	N
Keroseen	0.80	3 @ 18°C	N
Fuel Oil # 6	0.90	660 @ 50°C	N
SAE 40 lube oil	0.90	200 @ 40°C	N
SAE 90 lube oil	0.90	320 @ 40°C	N
Propane	0.46	0.2 @ 40°C	N
Bunker-C fuel oil	0.93	1500 @ 15°C	N
PHARAMACEUTICALS			
Caster Oil	0.96	350	N
Cough Syrup	1.00	190	N
PLASTICS & RESINS			
Polyster Resin	1.40	3000	
PVA Resin	1.30	65000	T
SUGAR SYRUPS			
Glucose	1.42	10000 @ 40°C	
Molassas - A	1.44	280~5k @ 40°C	
Molassas - B	1.46	1k~13k @ 40°C	
Molassas - C	1.47	3k~6k @ 40°C	
60 Brix	1.29	75 @ 15°C	N
68 Brix	1.34	360 @ 15°C	N
76 Brix	1.39	4000 @ 15°C	N
Corn syrup	1.39	15000 @ 15°C	

PRESSURE DROP LIMITATIONS ON PD FLOWMETERS

Positive displacement flowmeters are an inexpensive means to accurately meter high viscosity clean liquids as high as 1 million centipoise however, the appropriate meter must be sized so that the pressure drop across the primary measuring elements (oscillating piston or oval rotor), does not exceed the maximum capability of either.

The oscillating piston meter can withstand 4 bar differential making it more suitable to high viscosity liquids, the oval meter is limited to 1 bar differential due to the pressure imposed on the rotor shafts.

FLOW RATE DE-RATING GUIDE FOR PD METERS

Viscosities	Maximum flow multiplier for PD meters		
Less than	Standard oval gear	Special cut oval gear	Oscillating piston
1,000 cp	1	1.00	1.00
2,000 cp	0.50	1.00	1.00
4,000 cp	0.42	0.84	0.90
6,000 cp	0.33	0.66	0.80
8,000 cp	0.25	0.50	0.70
30,000 cp	0.15	0.30	0.60
60,000 cp	0.12	0.25	0.50
150,000 cp	0.10	0.20	0.40
250,000 cp	0.05	0.10	0.15
1,000,000 cp	0.025	0.05	0.08

ACCURACY CURVES & PRESSURE DROP

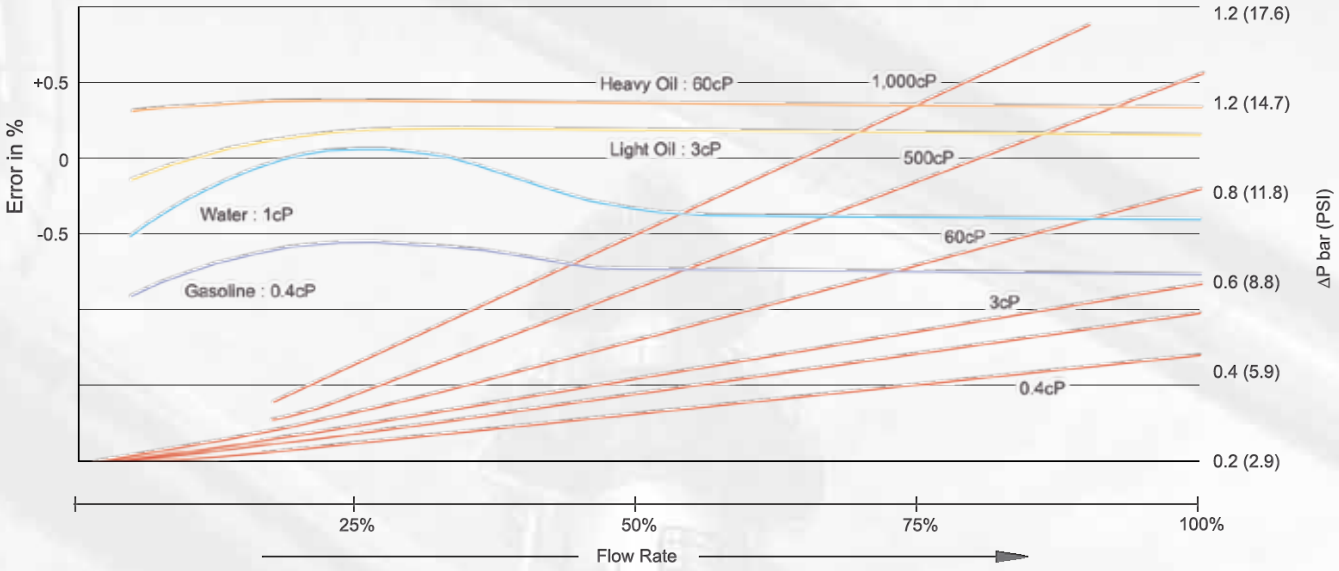

PRESSURE DROP LIMIT VERSES FLOW RATE

The curves below represent the pressure drop for standard and special cut high viscosity oval rotors at various viscosities. Special cut rotors have alternate tooth relieve which effectively reduces the pressure drop by 50%.

Viscosities are in centipoise and the pressure drop is in Bar *(1 Bar = 14.7psig)*. When sizing an oval meter for viscous liquids be sure your selection falls on or below the 1 bar maximum allowable pressure drop line on the graph.

PRESSURE DROP CURVES FOR STANDARD & SPECIAL CUT OVAL ROTORS

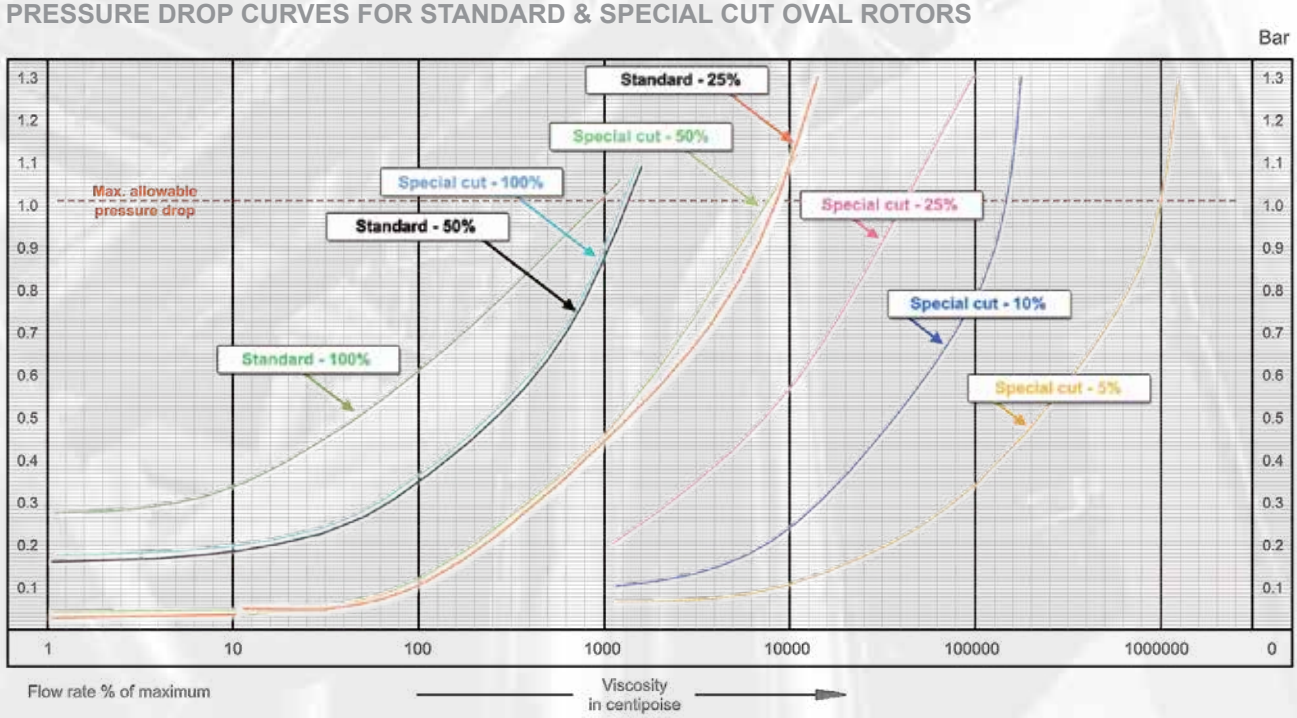

CERTIFICATIONS – meters & flow instruments

BanksiaControls is a quality certified company and manufacturer holding a number of approvals which qualify much of the propriety product range for safe application within hazardous, safe & aggressive industrial environments throughout the world, these include:

FLAMEPROOF APPROVAL (Exd)

IECEx. ATEX Exd IIB T6 (60ºC) & T4 IP66 / IP67
Oval Gear & Oscillating Piston positive displacement flowmeters.

INTRINSICALLY SAFE APPROVAL (I.S.)

IECEx. ATEX EEx ia IIB T4 (Tamb=60ºC) IP66 / IP67
Self powered & externally powered flow reading instruments, meter or remote mounted.

CE & EMI / EMC CONFORMITY

Applies to all product produced by BanksiaControls.

PED PRESSURE DIRECTIVE

Product conforms to directive 97/23/EC pressure equipment.

RoHS WEEE CONFORMITY

All electronic product conforms to RoHS & WEEE green regulation directive for monitoring & control instruments.

CALIBRATION – PD & Turbine flowmeters

All BanksiaControls positive displacement (PD) and turbine flowmeters are flow tested and each is supplied with an individual calibration certificate as shown. Calibration is traceable to the National Measurements Institute (NMI) Australia.

Turbine flowmeters are calibrated over 5 points in keeping with applications on low viscosity liquids whilst PD flowmeters, due to their application on a wide range of liquid viscosities, are calibrated at one point, multipoint calibration for PD meters is available on request at an additional charge.

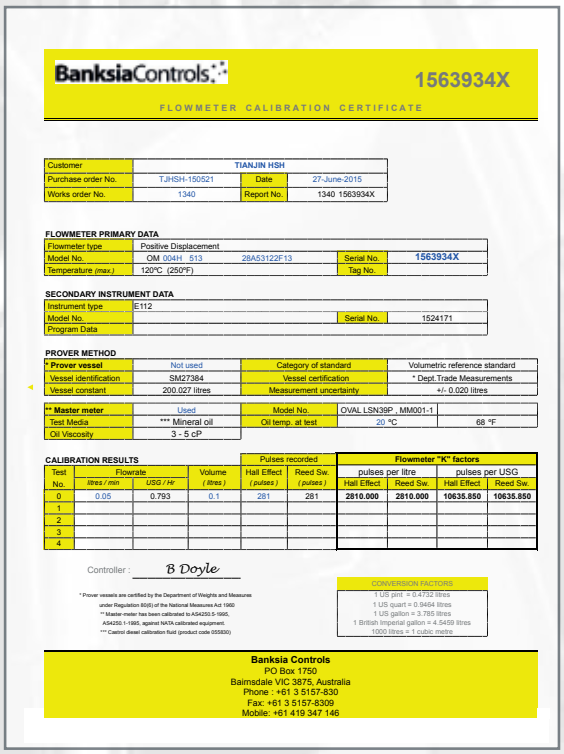

BanksiaControls 1563934X

FLOWMETER CALIBRATION CERTIFICATE

Customer	TIANJIN HSH		
Purchase order No.	TJHSH-150521	Date	27-June-2015
Works order No.	1340	Report No.	1340 1563934X

FLOWMETER PRIMARY DATA

Flowmeter type	Positive Displacement			
Model No.	OM 004H 513	28A53122F13	Serial No.	1563934X
Temperature *(max.)*	120ºC (250ºF)		Tag No.	

SECONDARY INSTRUMENT DATA

Instrument type	E112		
Model No.		Serial No.	1524171
Program Data			

PROVER METHOD

* Prover vessel	Not used	Category of standard	Volumetric reference standard	
Vessel identification	SM27384	Vessel certification	* Dept.Trade Measurements	
Vessel constant	200.027 litres	Measurement uncertainty	+/- 0.020 litres	
** Master meter	Used	Model No.	OVAL LSN39P , MM001-1	
Test Media	*** Mineral oil	Oil temp. at test	20 ºC	68 ºF
Oil Viscosity	3 - 5 cP			

CALIBRATION RESULTS

Test No.	Flowrate litres / min	Flowrate USG / Hr	Volume (litres)	Pulses recorded Hall Effect (pulses)	Pulses recorded Reed Sw. (pulses)	Flowmeter "K" factors pulses per litre Hall Effect	Flowmeter "K" factors pulses per litre Reed Sw.	Flowmeter "K" factors pulses per USG Hall Effect	Flowmeter "K" factors pulses per USG Reed Sw.
0	0.05	0.793	0.1	281	281	**2810.000**	**2810.000**	**10635.850**	**10635.850**
1									
2									
3									
4									

Controller : B Doyle

* Prover vessels are certified by the Department of Weights and Measures under Regulation 80(6) of the National Measures Act 1960
** Master meter has been calibrated to AS4250.5-1995, AS4250.1-1995, against NATA calibrated equipment.
*** Castrol diesel calibration fluid (product code 055830)

CONVERSION FACTORS
1 US pint = 0.4732 litres
1 US quart = 0.9464 litres
1 US gallon = 3.785 litres
1 British Imperial gallon = 4.5459 litres
1000 litres = 1 cubic metre

Banksia Controls
PO Box 1750
Bairnsdale VIC 3875, Australia
Phone : +61 3 5157-830
Fax: +61 3 5157-8309
Mobile: +61 419 347 146

BanksiaControls

Innovative engineering and features can be attributed to 30 *years* of flow metering *experience* coming from the **Banksia Controls** design team

Available From:

Part No. BCCPOXX0816

Banksia Controls
P.O. Box 1750, Bairnsdale VIC 3875, Australia
Ph. +613 5157 8309 **Fax.** +613 5157 8332
Email: sales@banksiacontrols.com.au
www.banksiacontrols.com.au